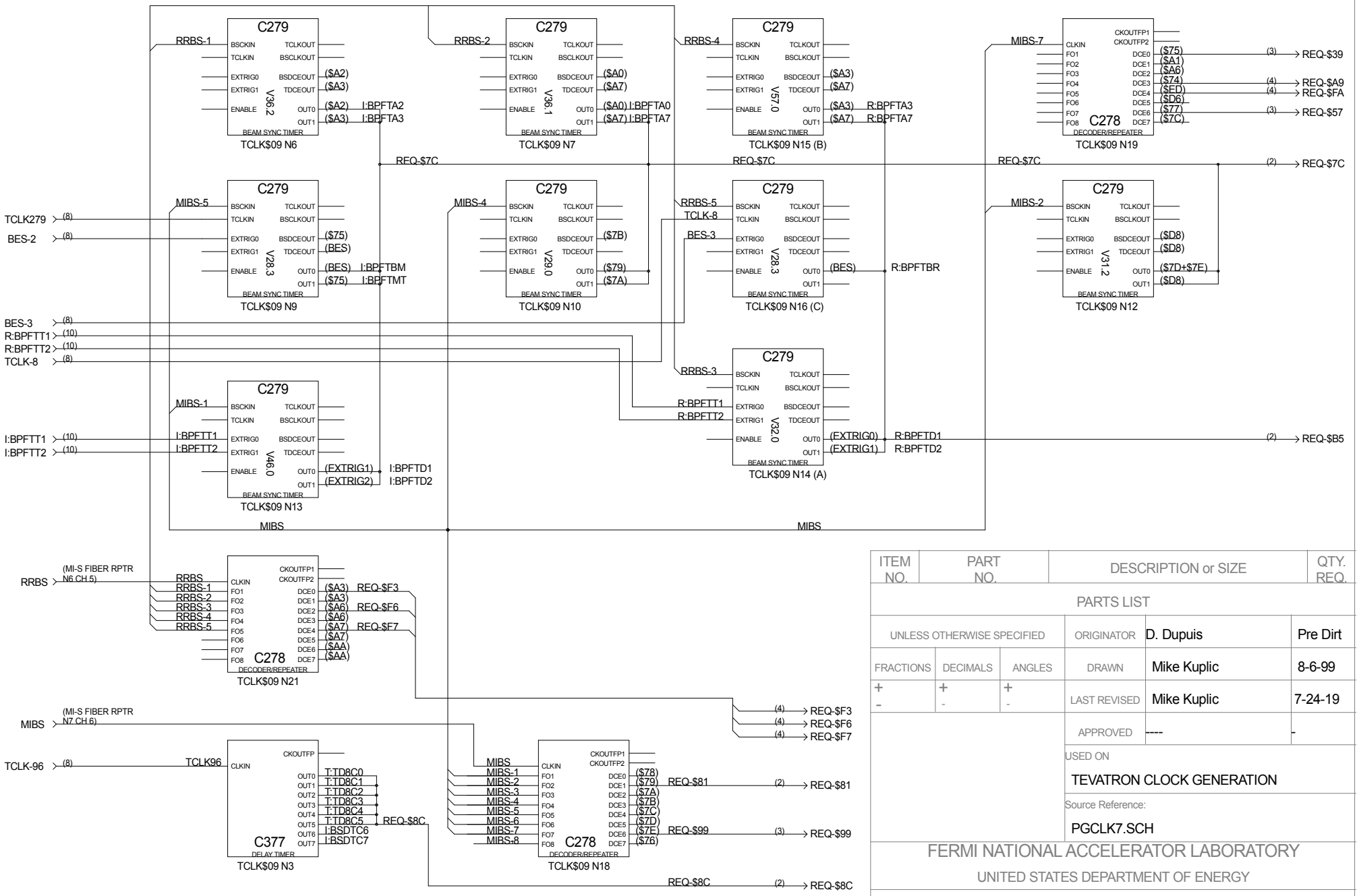

ITEM NO.	PART NO.	DESCRIPTION or SIZE	QTY. REQ.
PARTS LIST			

UNLESS OTHERWISE SPECIFIED			ORIGINATOR	D. Dupuis	Pre Dirt
FRACTIONS	DECIMALS	ANGLES	DRAWN	Mike Kuplic	8-6-99
+ -	+ -	+ -	LAST REVISED	Mike Kuplic	7-24-19
			APPROVED	----	-

USED ON

TEVATRON CLOCK GENERATION

Source Reference:

PGCLK7.SCH

FERMI NATIONAL ACCELERATOR LABORATORY

UNITED STATES DEPARTMENT OF ENERGY

TEVATRON CLOCK INTERCONNECT BEAM SYNC CLOCK DETECTION

SCALE	DRAWING NUMBER	REV.
1:1	Page 7 of 15	A