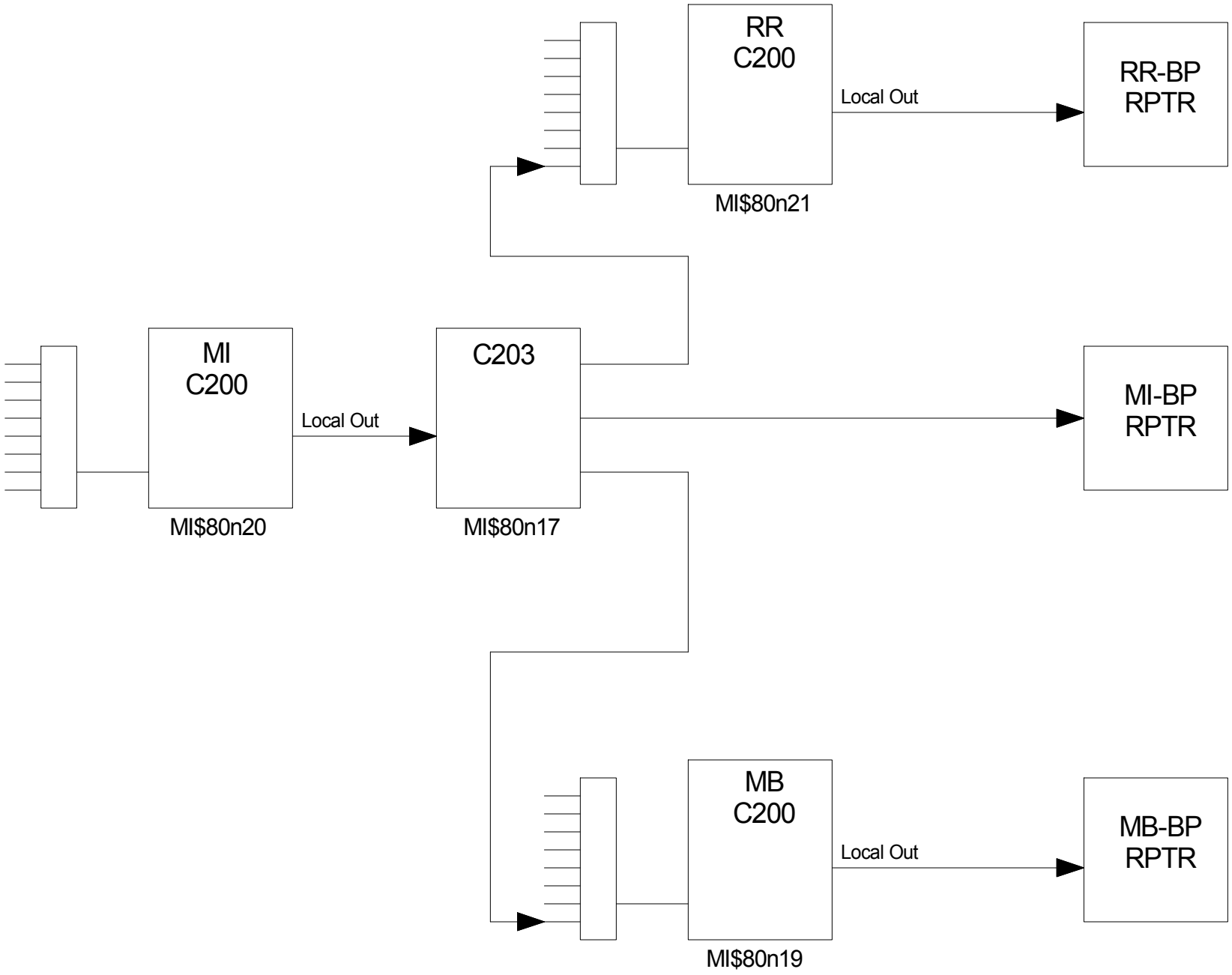

MI-8 Beam Permit Interconnect