REV	DESCRIPTION	DRAWN	DATE
		APPROVED	DATE

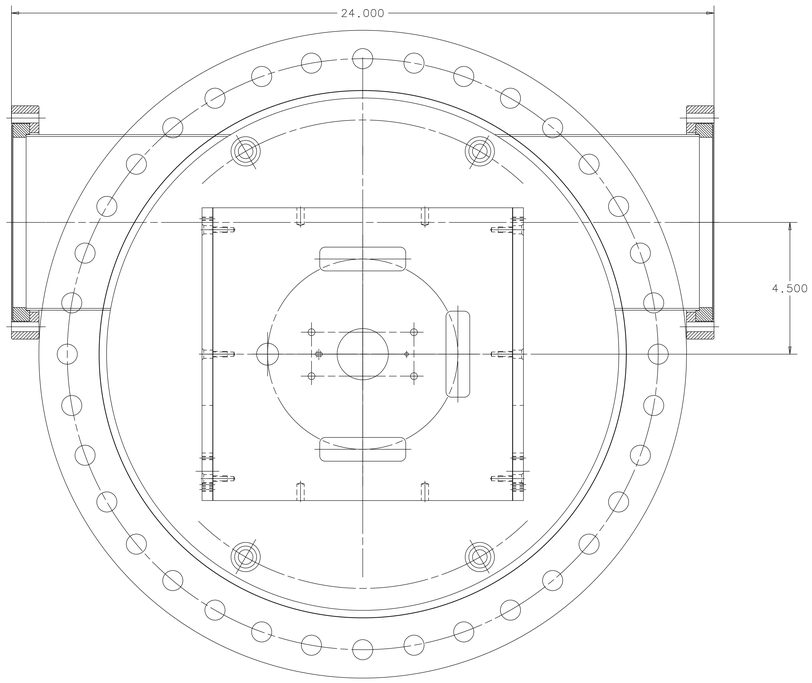

VIEW A-A

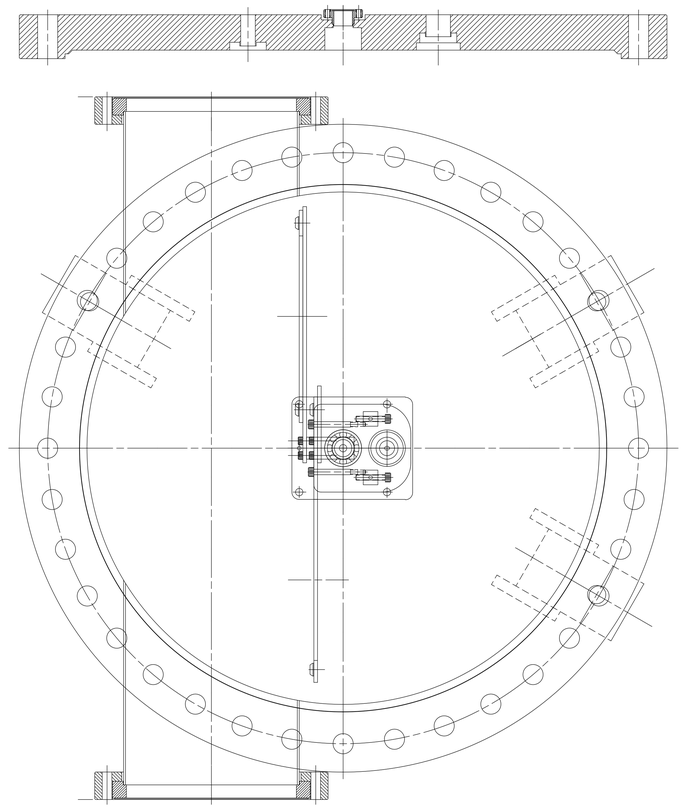

VIEW B-B

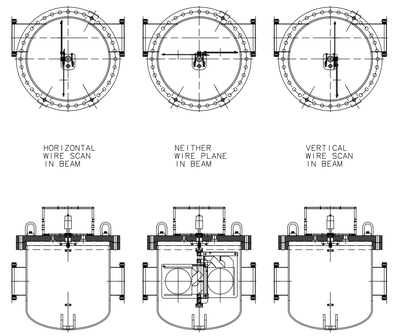

ASME elliptical tank head
304 SS
18" OD x .25 wall thickness
32 lbs

MDC F133075T
Conflat flange
1.33 x .75

Nor-Cal 800-600R
Conflat flange
8 x 6
5.5 lbs

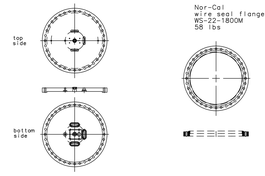

Nor-Cal
wire seal flange
WS-22-180OM
58 lbs

Nor-Cal wire seal
WS-22-000F
163 lbs

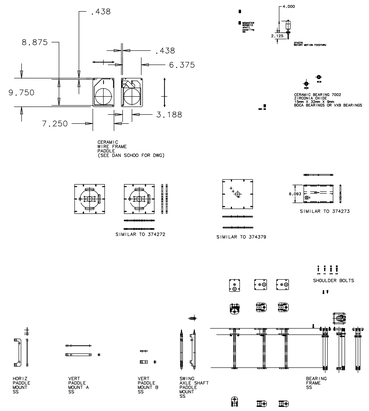

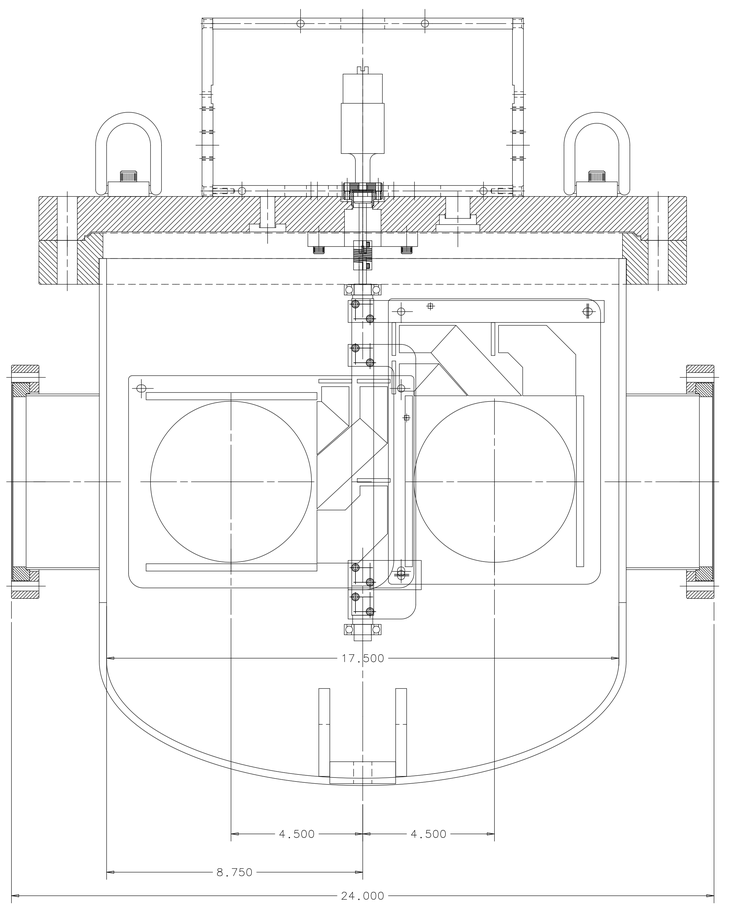

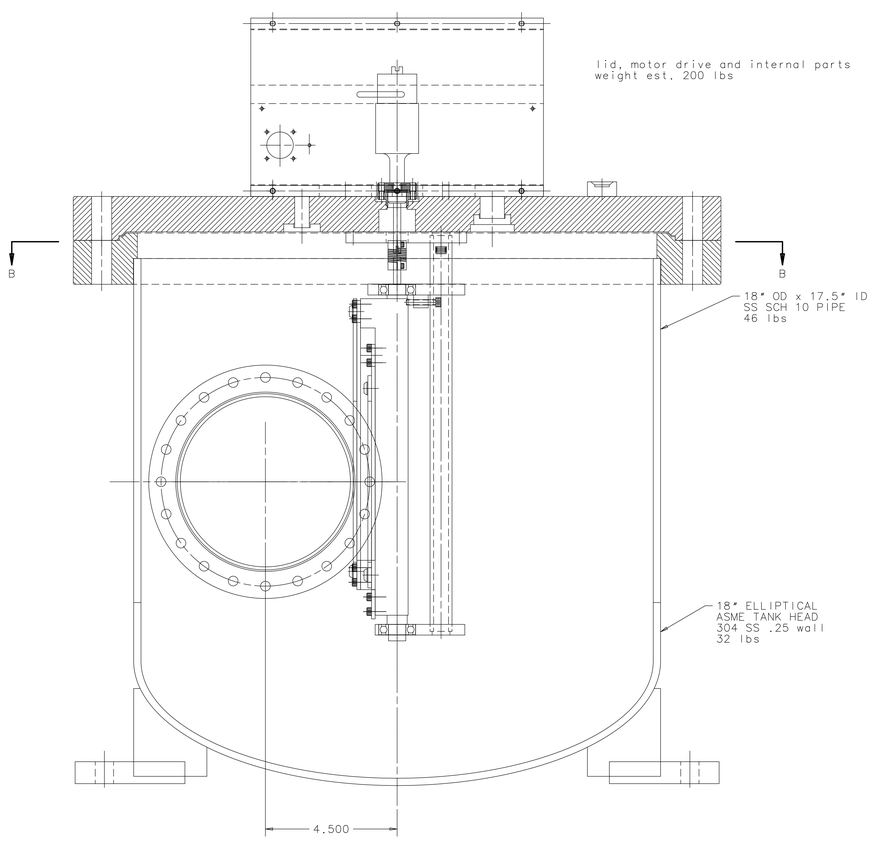

lower vacuum chamber
weight est. 175 lbs

UNLESS OTHERWISE SPECIFIED			ORIGINATOR	DAN SCHOO	12/15/10
FRACTIONS	DECIMALS	ANGLES	DRAWN	ROB REILLY	12/15/10
± 1/16	± .015	± 1°	CHECKED		
1. BREAK ALL SHARP EDGES .015 MAX. 2. DO NOT SCALE DRAWING. 3. DIMENSIONS BASED UPON ANSI Y14.5M-1982 4. MAX. ALL MACH. SURFACES 63			APPROVED		
			USED ON		
			MATERIAL		

FERMI NATIONAL ACCELERATOR LABORATORY
UNITED STATES DEPARTMENT OF ENERGY

LINAC
WIRE 5 BEAM PROFILE MONITOR
BOLTED FLANGED VACUUM CAN LAYOUT

SCALE	DRAWING NUMBER	SHEET	REV
1/2	. — —	1 OF 1	

CREATED WITH : GROUP:

Created: 16:48:42 on 08-06-01 (D-M-Y) By: reilly State: NONE