REV	DESCRIPTION	DRAWN	DATE
		APPROVED	DATE

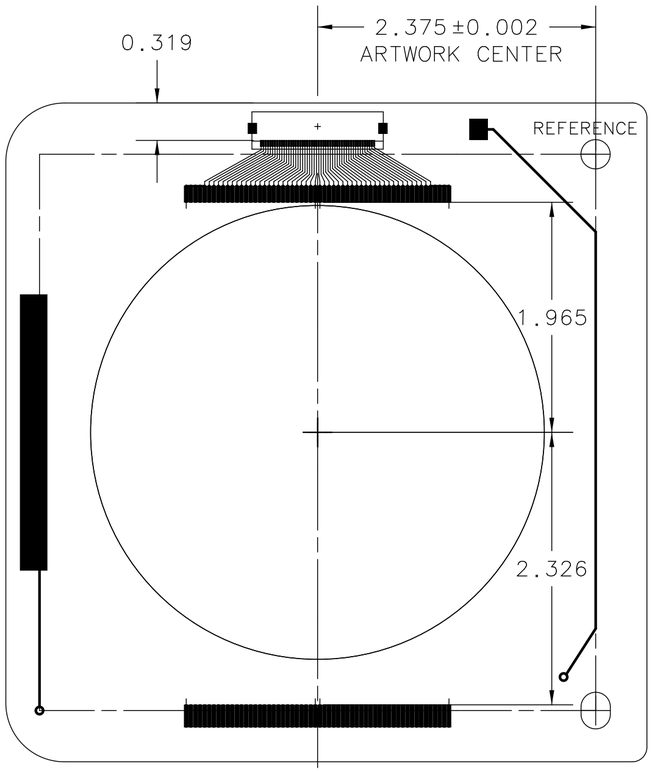

ARTWORK
BACK VIEW

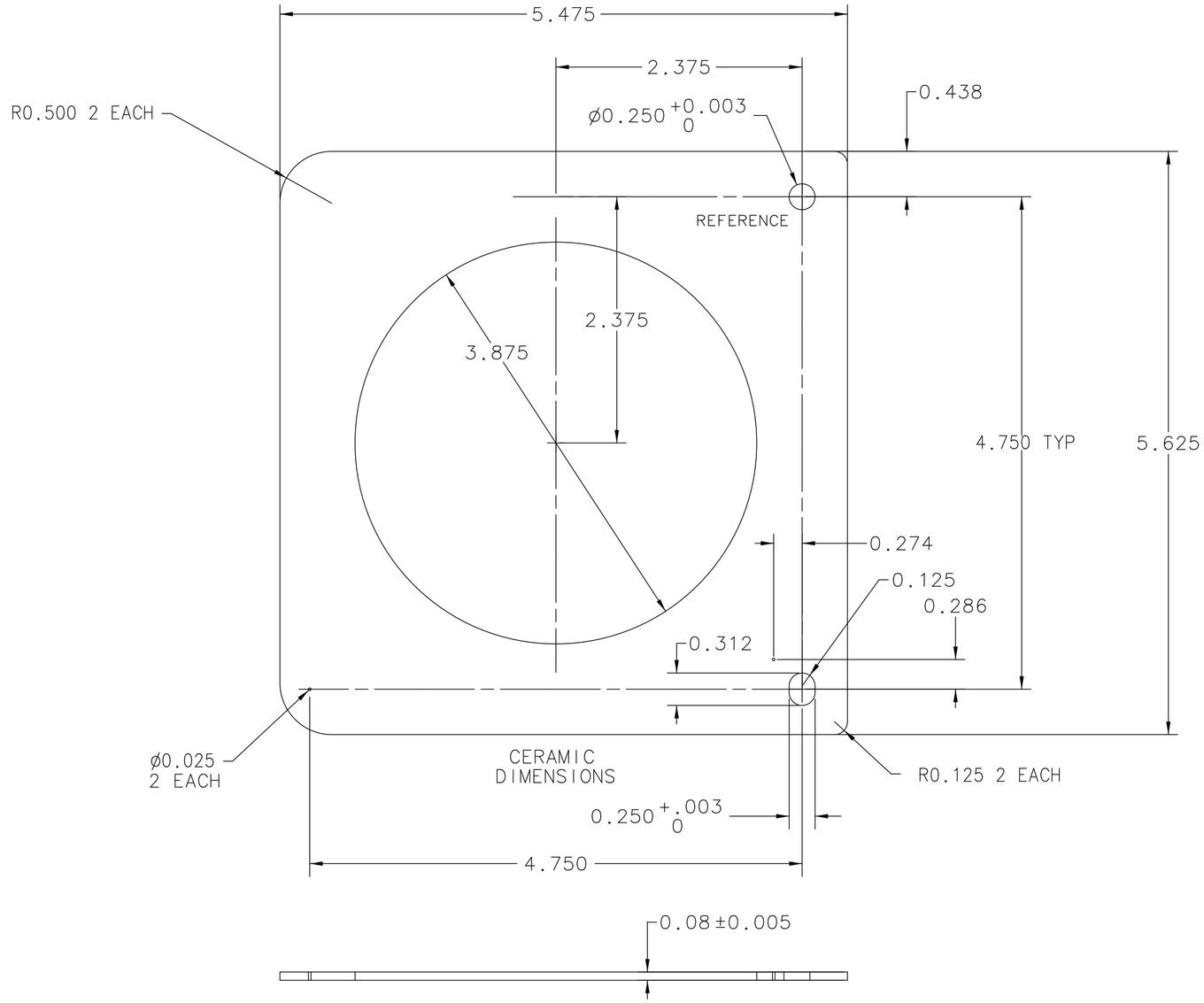

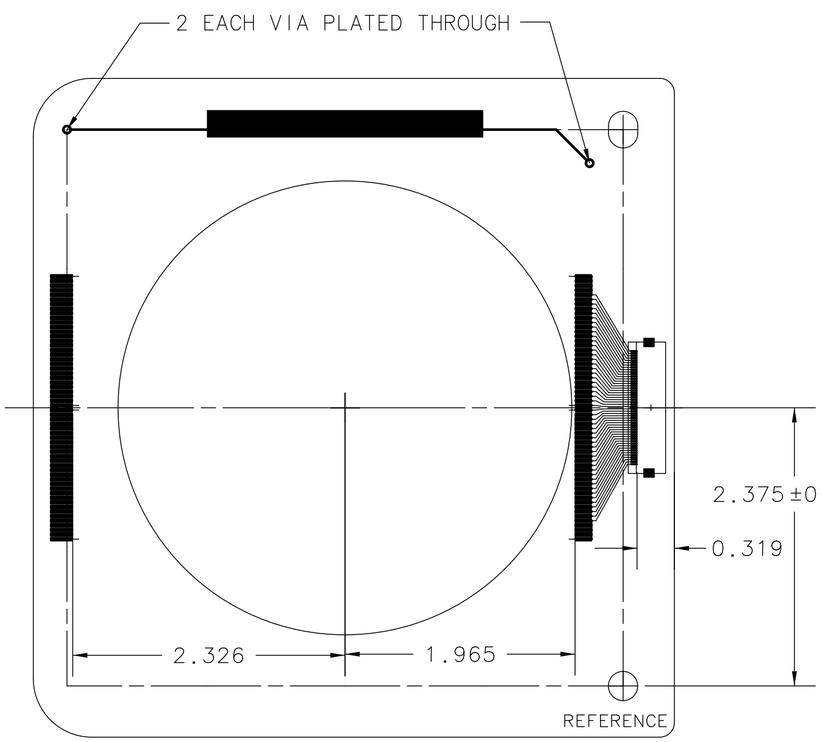

ARTWORK
FRONT
VIEW

NOTE:
HOLE TOLERANCE TO BE ±.002
CAMBER TO BE ±.003
LENGTH/WIDTH TOLERANCE
TO BE +.020/-.004

CENTER AND END WIRE ALIGNMENT MARKS
PROJECTING FROM THE PADS SHOULD NOT BE
REMOVED FROM THE FINAL ARTWORK SCREENS.

NOTICE: IMAGE OBTAINED FROM FERMILAB WEB SITE

This information is provided for REFERENCE use only.
Not for MANUFACTURE, or DESIGN INFORMATION.
All information contained in this document represents work sponsored by an agency of the U.S. Government.
Neither the U.S. Government nor any agency thereof, nor Universities Research Association, Inc., nor any of their employees or officers, makes any warranty, express or implied, or assumes any legal liability or responsibility for the accuracy, completeness, or usefulness of any information, apparatus, product or process disclosed, or represents that its use would not infringe privately owned rights.

UNLESS OTHERWISE SPECIFIED			ORIGINATOR	D.SCHOO	18-MAY-2004
			DRAWN	J.MICHALIC	15-FEB-2008
±	±	±	CHECKED	L.PURCELL-TAYLOR	10-AUG-2008
1. BREAK ALL SHARP EDGES MAX.			APPROVED	L.PURCELL-TAYLOR	10-AUG-2008
2. DO NOT SCALE DRAWING. 3. DIMENSIONS BASED UPON			USED ON	9508.000-ME-374488	
4. MAX. ALL MACH. SURFACES √			MATERIAL	ALUMINA 96	
5. DRAWING UNITS:					

FERMI NATIONAL ACCELERATOR LABORATORY
UNITED STATES DEPARTMENT OF ENERGY

MAIN INJECTOR MULTIWIRE DETECTOR DOUBLE SIDED 1MM CERAMIC FRAME

SCALE	DRAWING NUMBER	SHEET	REV
1:1	9508.000-MC-463182	1 OF 1	

CREATED WITH : Ideas12NXSeries | GROUP: ACCELERATOR MECH. SUPPT.