TOP VIEW FOR END VIEW #3

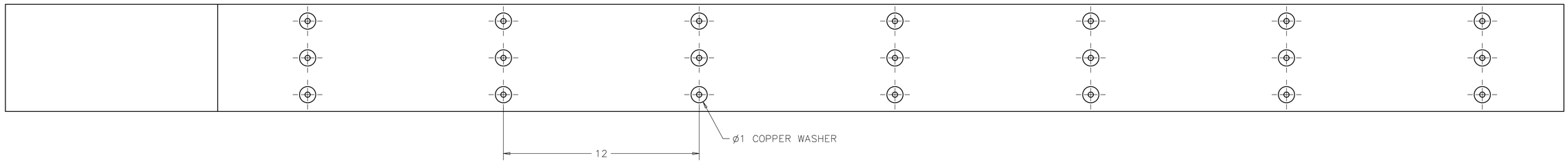

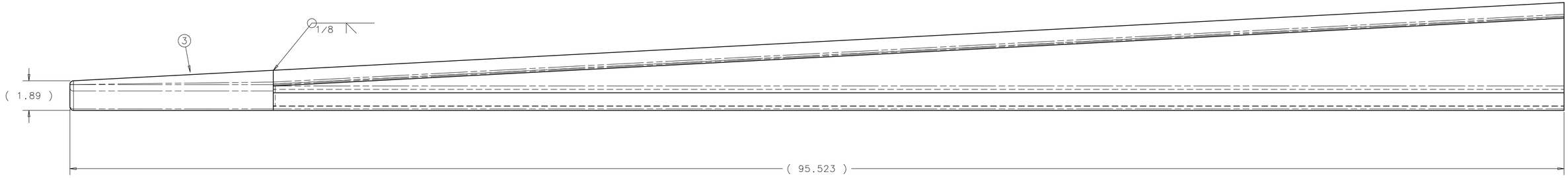

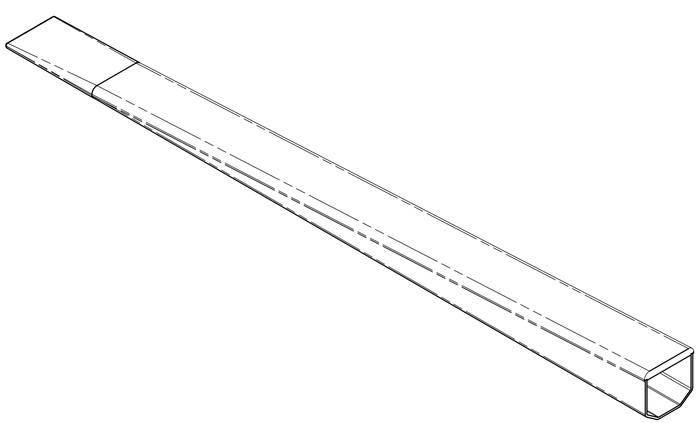

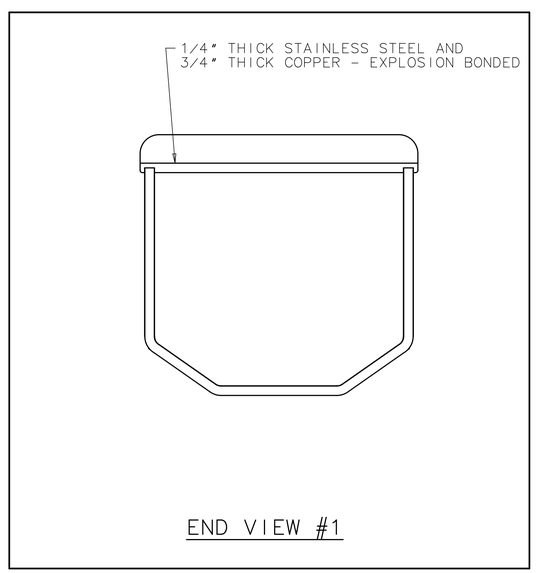

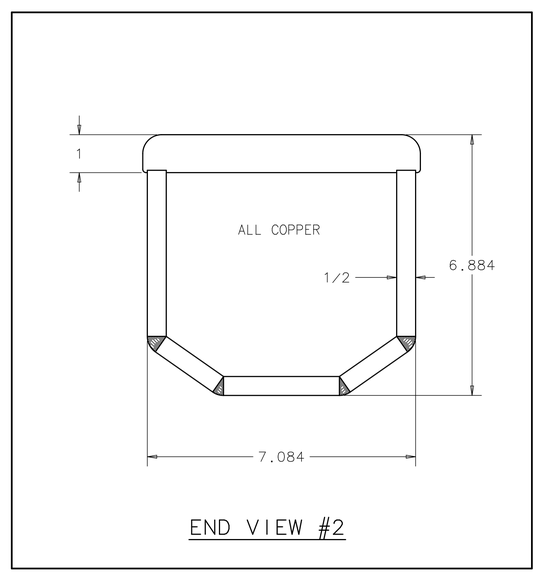

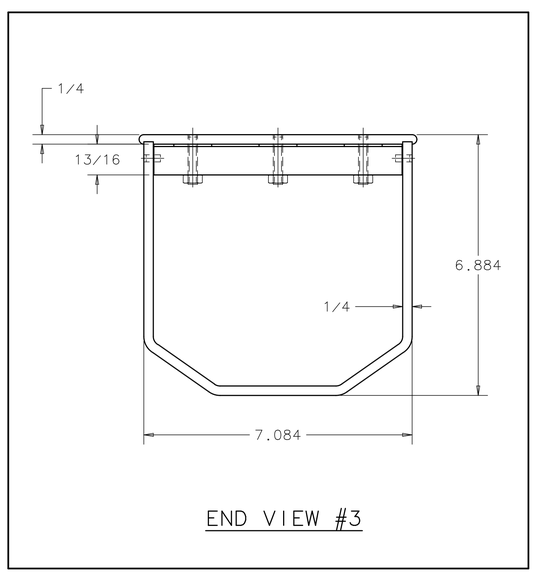

Created: 11:04:49 on 26-04-10 (D-M-Y) By: dschmitt State: 1-INITIAL