REV	DESCRIPTION	DRAWN	DATE
		APPROVED	DATE

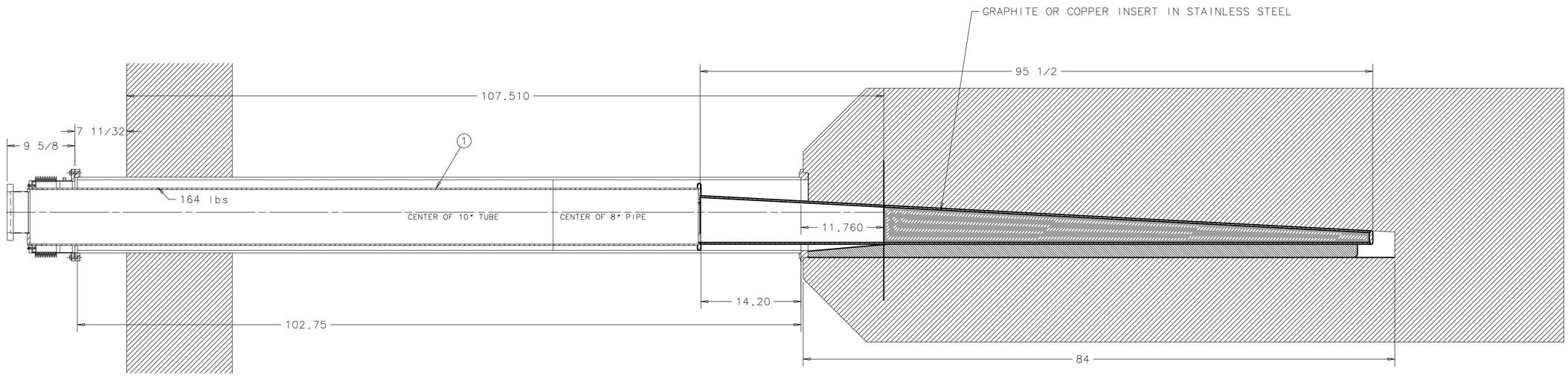

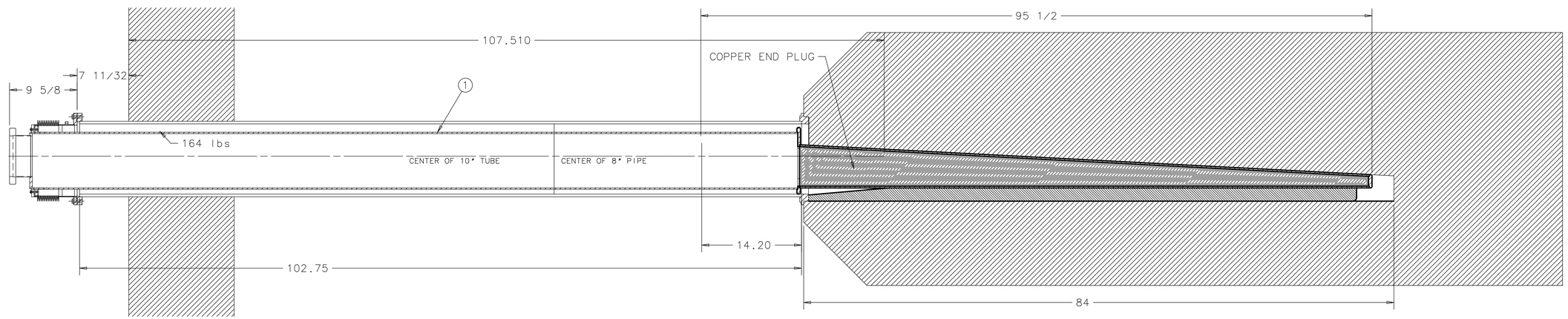

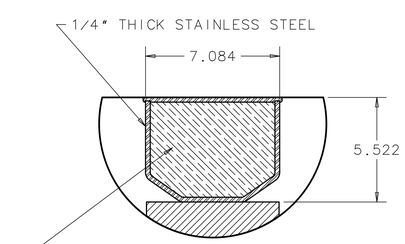

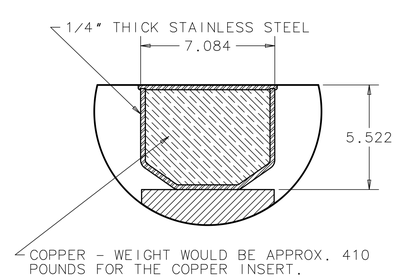

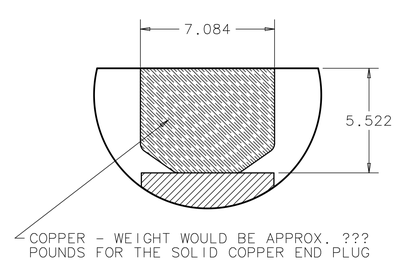

ITEM	PART NO.	DESCRIPTION OR SIZE	QTY.

PARTS LIST

UNLESS OTHERWISE SPECIFIED			ORIGINATOR	R.REILLY	29-JAN-2010
FRACTIONS	DECIMALS	ANGLES	DRAWN	D.SCHMITT	29-JAN-2010
± 1/64	± .005	± 1°	CHECKED		
			APPROVED		

1. BREAK ALL SHARP EDGES .015 MAX.
2. DO NOT SCALE DRAWING.
3. DIMENSIONS BASED UPON ASME Y14.5M-1994
4. MAX. ALL MACH. SURFACES 63
5. DRAWING UNITS: U.S. INCH

USED ON

MATERIAL: SEE PARTS LIST

FERMI NATIONAL ACCELERATOR LABORATORY
UNITED STATES DEPARTMENT OF ENERGY

LINAC BEAM DUMP 2 BEAMTUBE ASSEMBLY

SCALE	DRAWING NUMBER	SHEET	REV
1/8	0250.000-MD-	1 OF 1	

CREATED WITH : Ideas12NXSeries | GROUP: ACCELERATOR MECH. SUPPT.