REV	DESCRIPTION	DRAWN	DATE
		APPROVED	DATE

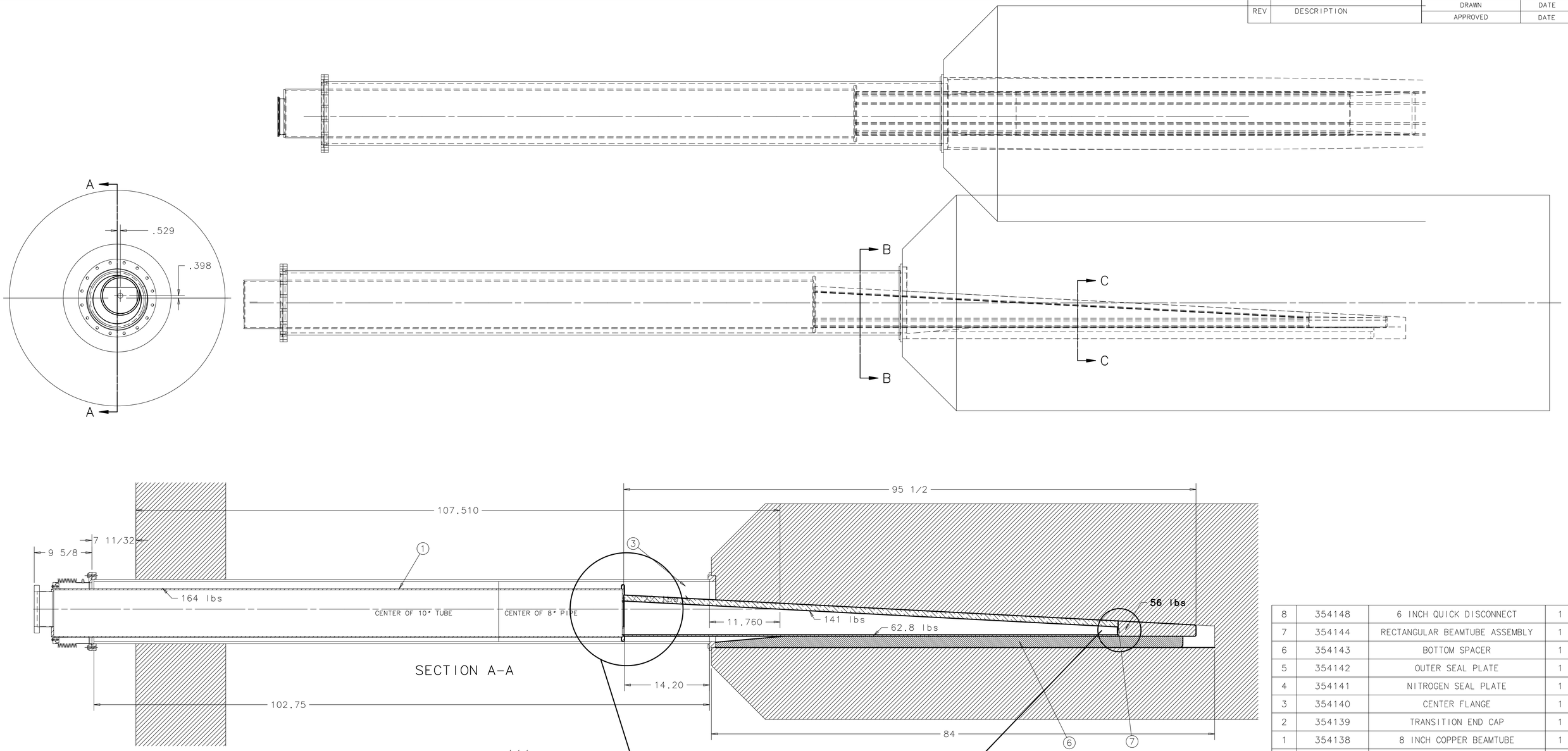

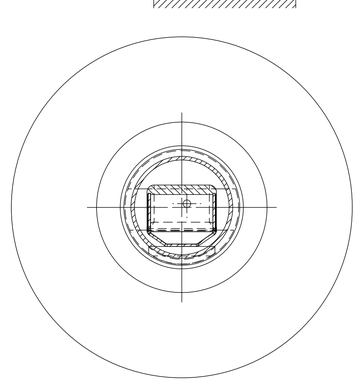

SECTION B-B

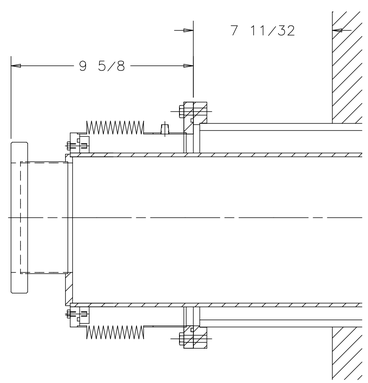

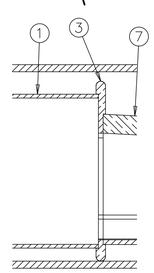

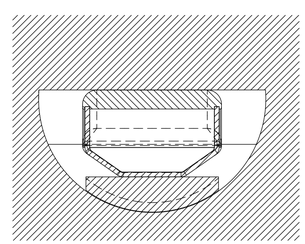

SECTION C-C

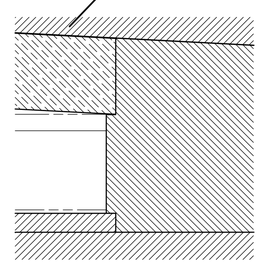

ITEM	PART NO.	DESCRIPTION OR SIZE	QTY.
8	354148	6 INCH QUICK DISCONNECT	1
7	354144	RECTANGULAR BEAMTUBE ASSEMBLY	1
6	354143	BOTTOM SPACER	1
5	354142	OUTER SEAL PLATE	1
4	354141	NITROGEN SEAL PLATE	1
3	354140	CENTER FLANGE	1
2	354139	TRANSITION END CAP	1
1	354138	8 INCH COPPER BEAMTUBE	1

PARTS LIST

UNLESS OTHERWISE SPECIFIED			ORIGINATOR	R.REILLY	29-JAN-2010
FRACTIONS	DECIMALS	ANGLES	DRAWN	D.SCHMITT	29-JAN-2010
± 1/64	± .005	± 1°	CHECKED		
			APPROVED		

1. BREAK ALL SHARP EDGES .015 MAX.
2. DO NOT SCALE DRAWING.
3. DIMENSIONS BASED UPON ASME Y14.5M-1994
4. MAX. ALL MACH. SURFACES 63
5. DRAWING UNITS: U.S. INCH

USED ON

MATERIAL: SEE PARTS LIST

FERMI NATIONAL ACCELERATOR LABORATORY
UNITED STATES DEPARTMENT OF ENERGY

LINAC BEAM DUMP 2 BEAMTUBE ASSEMBLY

SCALE	DRAWING NUMBER	SHEET	REV
1/8	0250.000-MD-354137	1 OF 1	

CREATED WITH : Ideas12NXSeries GROUP: ACCELERATOR MECH. SUPPT.

Created: 13:20:34 on 20-04-10 (D-M-Y) By: dschmitt State: 1-INITIAL