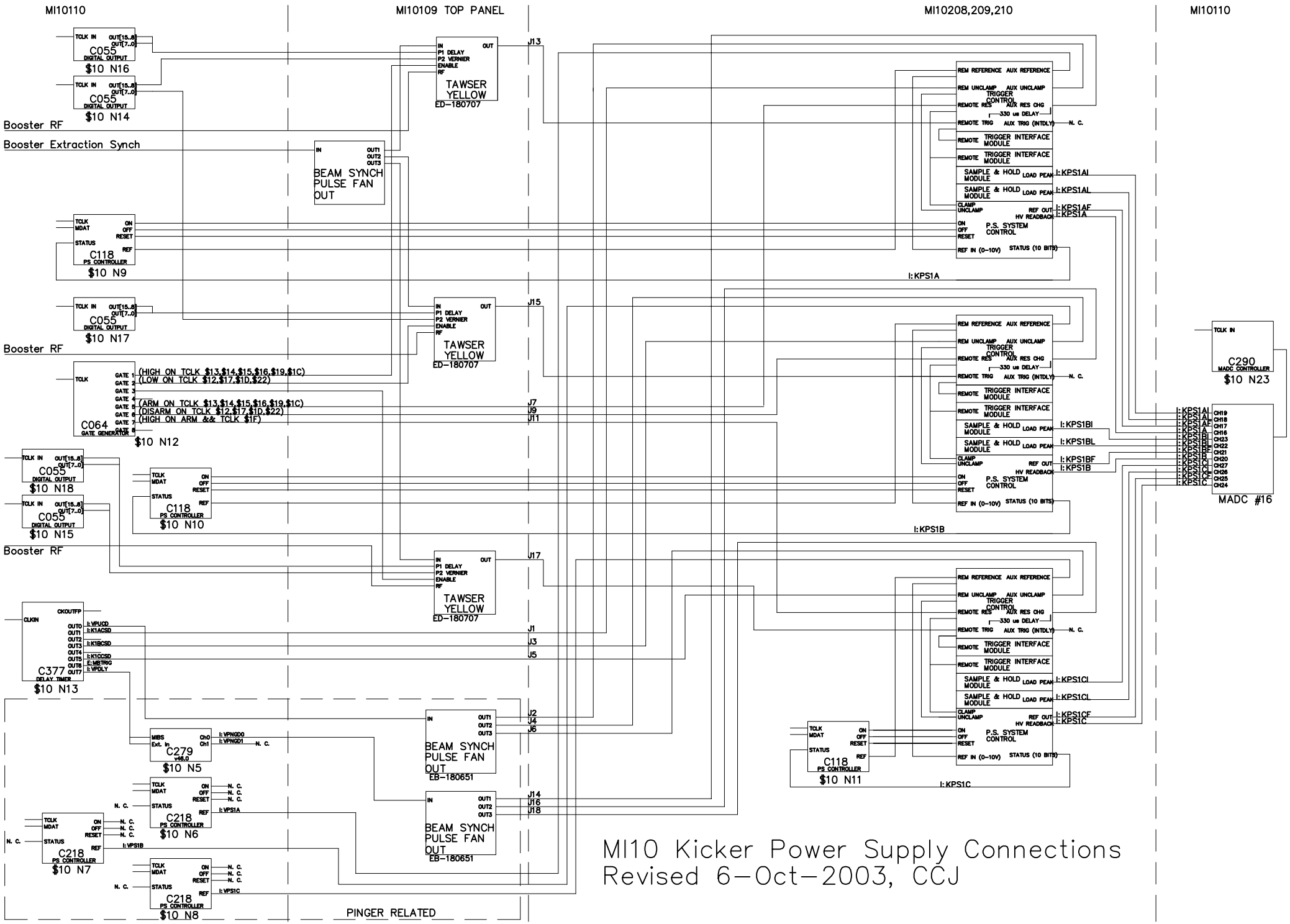
MI10110
MI10109 TOP PANEL
MI10208,209,210
MI10110
C055 DIGITAL OUTPUT $10 N16
C055 DIGITAL OUTPUT $10 N14
Booster RF
Booster Extraction Synch
BEAM SYNCH PULSE FAN OUT
TAWSER YELLOW ED-180707
C118 PS CONTROLLER $10 N9
C055 DIGITAL OUTPUT $10 N17
Booster RF
C064 GATE GENERATOR $10 N12
(HIGH ON TCLK $13,$14,$15,$16,$19,$1C)
(LOW ON TCLK $12,$17,$1D,$22)
(ARM ON TCLK $13,$14,$15,$16,$19,$1C)
(DISARM ON TCLK $12,$17,$1D,$22)
(HIGH ON ARM && TCLK $1F)
C055 DIGITAL OUTPUT $10 N18
C055 DIGITAL OUTPUT $10 N15
C118 PS CONTROLLER $10 N10
Booster RF
C377 DELAY TIMER $10 N13
C279 $10 N5
C218 PS CONTROLLER $10 N6
C218 PS CONTROLLER $10 N7
C218 PS CONTROLLER $10 N8
PINGER RELATED
TRIGGER CONTROL
TRIGGER INTERFACE MODULE
SAMPLE & HOLD MODULE
P.S. SYSTEM CONTROL
I:KPS1A
I:KPS1B
I:KPS1C
C290 MADC CONTROLLER $10 N23
MADC #16
MI10 Kicker Power Supply Connections
Revised 6-Oct-2003, CCJ